PS-32R

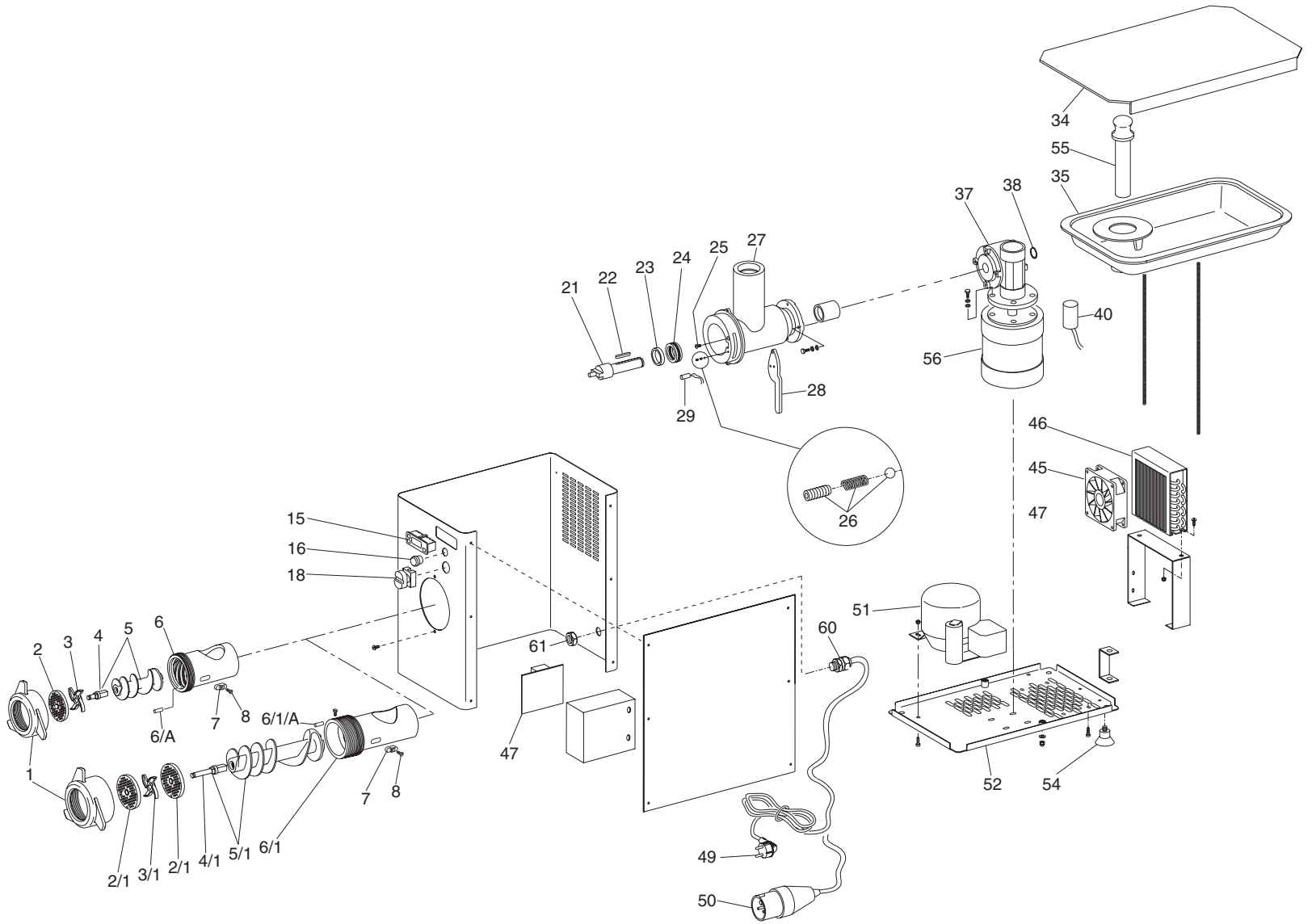
34
55
35
37
38
27
25
24
23
22
21
40
56
28
29
26
46
45
47
15
16
18
51
60
61
2
3
4
5
6
6/A
7
8
6/1/A
1
47
52
54
7
8
2/1
3/1
2/1
4/1
5/1
6/1
49
50